802D1

GETTING STARTED GUIDE

Continental Electronics Corporation
4212 South Buckner Blvd.
Dallas, Texas 75227

Phone (214) 381-7161

http://www.contelec.com/

9911180941

802D1 Getting Started Guide

It is the purpose of this manual to help you get started with your new 802D1 exciter. Section 1 gives typical simplified setup instructions for the different types of audio input that you may have. You must setup your audio processing or STL equipment to provide an acceptable input to the selected 802D1 input.

There are drawings showing the LED indicators on the front and rear and the signal input connections on the rear panel in Section 1.

Section 2 of the manual shows the various screens that are used to monitor and set the exciter parameters. The text below each screen photo is from the exciter help files.

802D1 GETTING STARTED GUIDE

SECTION 1
Connections and Setup

SECTION 1, TABLE OF CONTENTS

802D1 EXCITER SETUP and SIGNAL CONNECTIONS

Refer to pages 1-4 and 2-1, for navigation instructions before proceeding with setup.

1. USING SCA INPUT

a. Connect your SCA audio cable(s) to the SCA input on the exciter rear panel. Refer to Figure 1 on page 1-4 for location.
b. Set the station's SCA generator output level to provide 3.5VPP to the exciter SCA input terminals.
c. On the **"SCA Injection"** screen (page 2-16), set the appropriate **"SCA Input Sens.**" level to 3.5VPP and set the **"Injection Level %"** to the desired injection level. (If the output level in step b is not 3.5VPP, set the **"SCA Input Sens."** to match the level that is present at the exciter SCA input).
d. On the **"Limiters & Filters"** screen (page 2-15), select the appropriate **"SCA BANDPASS FILTER"**.

2. USING COMPOSITE INPUT

a. Connect the Composite output from the Audio Processor or STL to 802D1 Composite Input. Refer to Figure 1 on page 1-4 for location.
b. Set processor for "0" DB or 100% output on the processors' bargraph or display.
c. On the **"Stereo Generator"** screen (page 2-13), select **"16 BIT A/D-1".**
d. On the **"Stereo Level"** screen (page 2-12). Use "Up/Down" cursor buttons to select **"Composite Inp. dbfs".** Use the thumb wheel to set desired modulation on your station modulation monitor or the **"Total Modulation"** meter on this screen.
e. On the **"Limiters & Filters"** screen (page 2-15), select the appropriate **"LOWPASS FILTER".**

3. ANALOG LEFT and RIGHT AUDIO INPUTS

a. Connect your Left and Right audio channels to the Left and Right XLR connectors on the exciter rear panel. Refer to Figure 1 on page 1-4 for location.
b. Set your audio processor to produce the correct audio output levels.
c. On the **"Stereo Generator"** screen (page 2-13), select **"20 BIT (ANALOG A/B").**
d. Select **"Delay & Emphasis"** screen (page 2-14). The exciter "**DE-EMPHASIS"** and **"PRE-EMPHASIS"** should be "**Off"** if your processor provides pre-emphasis. If your processor does not provide pre-emphasis, set

(Continued on next page)

"PRE-EMPHASIS" to **"On",** and select the appropriate pre-emphasis on this screen (75usec in the US and Canada, and 50usec in some other parts of the world).

e. Select the **"Stereo Control"** screen (page 2-11) and adjust the **"Pilot Injection Level"** to the desired level, usually 9%.
f. Select the **"Stereo Level"** screen (page 2-12). Use the "Up/Down" Cursor to select **"Analog Audio Inp."** Use the thumb wheel to set desired modulation on your station modulation monitor or the **"Total Modulation"** meter on this screen.
g. On the **"Limiters & Filters"** screen (page 1-15), select the appropriate **"LOWPASS FILTER"** and/or **"SCA BANDPASS FILTER"**.

4. AES/EBU, DIGITAL AUDIO INPUTS

a. Connect your AES/EBU audio cable to the AES/EBU XLR connector on the exciter rear panel. Refer to figure 1 on page 1-4 for location.
b. Adjust your audio processor AES/EBU output level control for 100% or "0" DB on the processors' display or bargraph.
c. On the **"Stereo Generator"** screen (page 2-13), select the **"AES/EBU"** input.
d. Select the **"Delay and Emphasis"** screen (page 2-14). Consult your processors' instruction manual for recommendations and refer to help screen on page 2-14 of this manual for instructions.
e. Select the **"Stereo Control"** screen (page 2-11) and adjust the **"Pilot Injection Level"** to the desired level, usually 9%.
f. Select the **"Stereo Level"** screen (page 2-12). Use the "Up/Down" cursor to select "**Digital Audio Inp.**". Use the thumb wheel to set desired modulation on your station modulation monitor on the **"Total Modulation"** meter on this screen.
g. On the **"Limiters & Filters"** screen (page 2-15), select the appropriate **"LOWPASS FILTER"** and/or **"SCA BANDPASS FILTER"**.

5. LED INDICATORS

a. **Front panel**: (Refer to Page 1-4, Figure 2)

Power: **Green** when power is applied to exciter.

Fault: **Green** when no fault exists.
Red when fault condition exists.

Continued on next page)

Composite, AES/EBU, Analog, and SCA Signal Inputs:

Green when selected and signal is present.
Red when selected but no signal present or *standby.
Off when not selected.

***NOTE**
AES/EBU and Composite can both have signal present at input to the exciter. When the AES/EBU signal is present, the AES/EBU LED will be green and the Composite LED will be off. If the AES/EBU signal is lost, the exciter will switch to the Composite signal input, the AES/EBU LED will change to red, and the exciter will use the composite input.

b. **Rear Panel:** (Refer to Page 1-4, Figure 1)
There are seven LED indicators on the exciter rear panel. All are tri-color, green when selected and signal is present, red when selected but no signal present, and off when not selected.

6. Multiple Frequencies

You received a DB25 plug for each additional frequency requested if you requested more than one frequency set on your exciter. These plugs contain jumpers that set the frequency and optimize all exciter parameters for each frequency. Each plug is labeled with a frequency and is to be inserted into the 25 pin remote connector on the exciter rear panel when that frequency is desired. The plug must remain in the connector during the time that this frequency is used.

When the plug is removed, the exciter's settings revert to those corresponding to frequency "0". This is the usual situation where the exciter is simply set and adjusted to a single specified frequency.

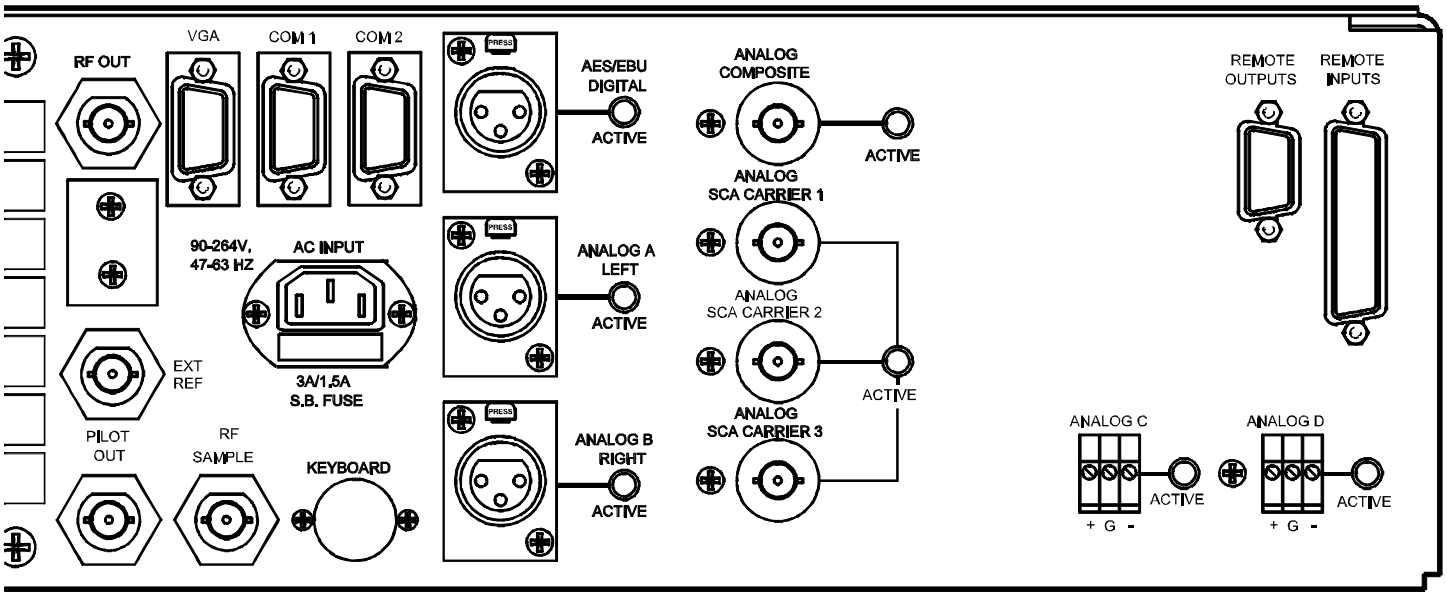

Figure 1, Rear Panel

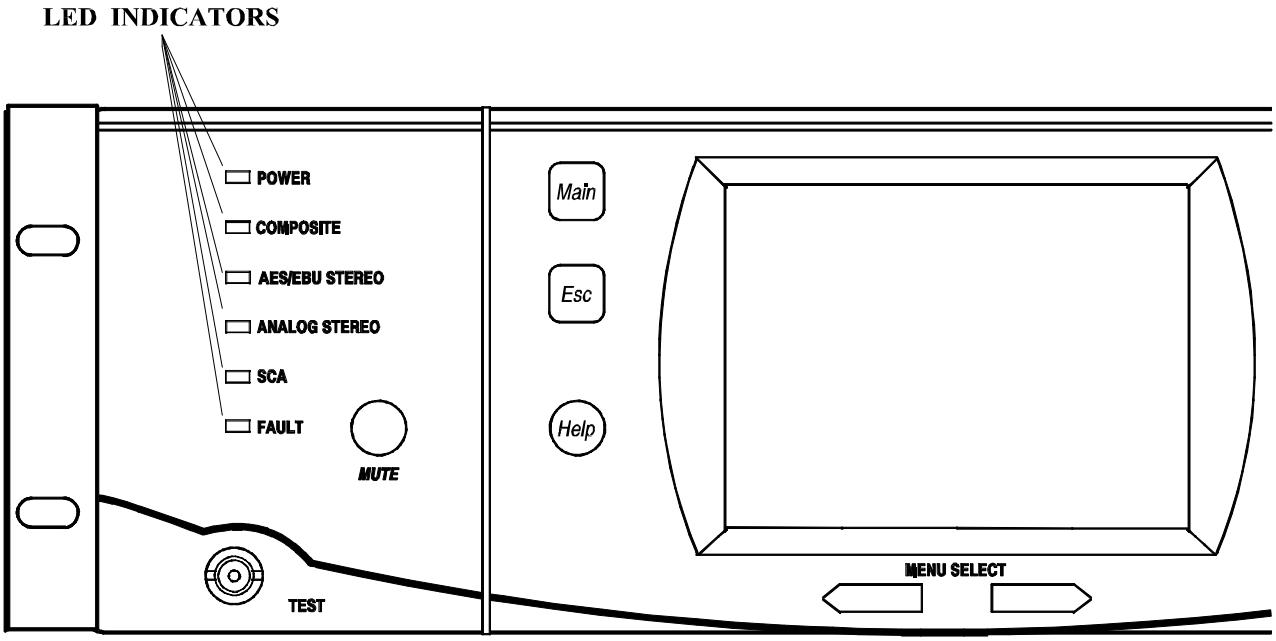

Figure 2, Front Panel

802D1 GETTING STARTED GUIDE

SECTION 2
Status and Control Screens

TABLE OF CONTENTS

This is the splash screen that is present immediately after exciter boot-up Each screen has an associated help screen. You can get help about any screen by pressing the help key.

Press ESC followed by MAIN to get to the primary (or main) screen.

Use the thumb wheel to scroll through the help text. Press the key marked ESC to return from the help screen.

There are several screens to the right and left the primary (or main) screen of the 802D1. The screens to the left contain helpful information about the current status of the 802D1. The screens to the right are for controlling the operation of the 802D1.

To navigate through the screens use the two menu select keys below the display screen. The arrow (or cursor) keys pointing up and down select various parameters on the current screen. The MAIN key can be used at any time to return to the main display screen.

Some parameters are variable values. These are displayed as a number in a box. Use the up and down arrow keys to select a variable. Then use the thumb wheel to increment or decrement a variable value.

Some options are digital in nature. In other words they are simply on or off. To turn on or off an option first use the up and down arrow key to select the option. Then turn the thumb wheel clockwise. The option will be turned on. Selecting some options will automatically turn off other options as necessary. The display will automatically update the status of all options when a selection is made.

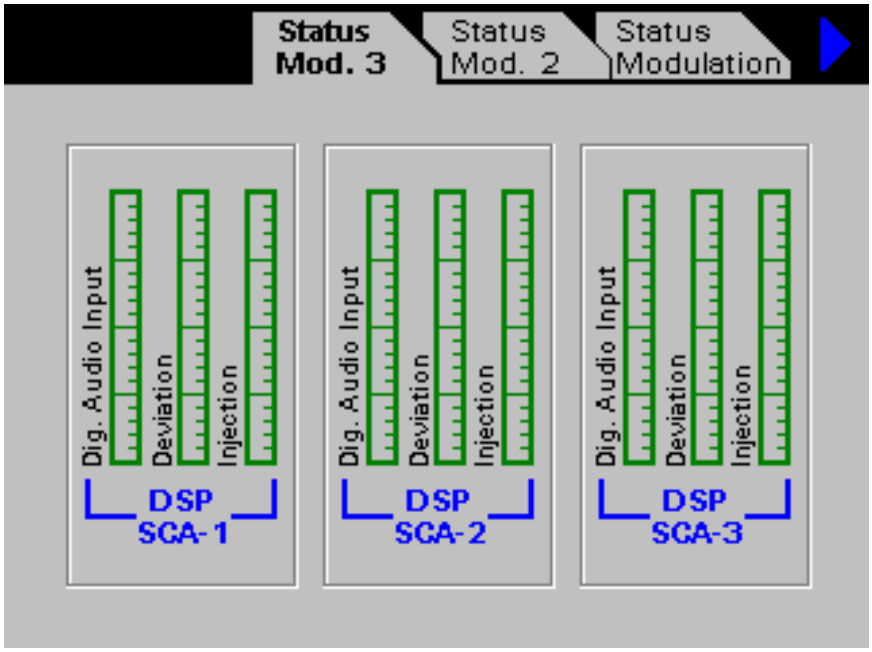

This SCA generator is an optional feature. Contact your District Sales Manager for information on how you can obtain the latest in digital SCA generation software.

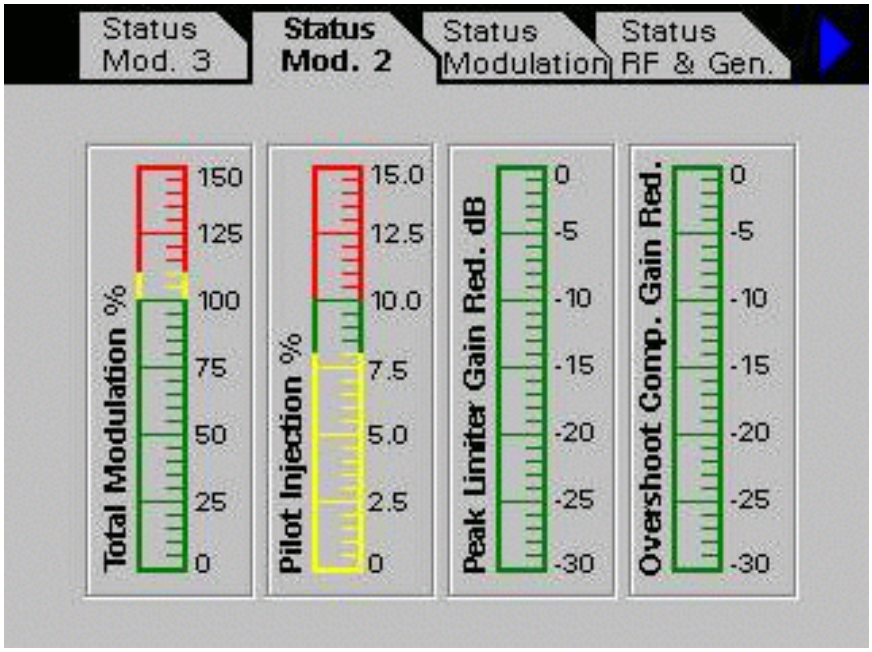

This screen displays total modulation as a percentage of 100%. 100% is defined as 75kHz deviation.

Pilot injection is displayed for reference.

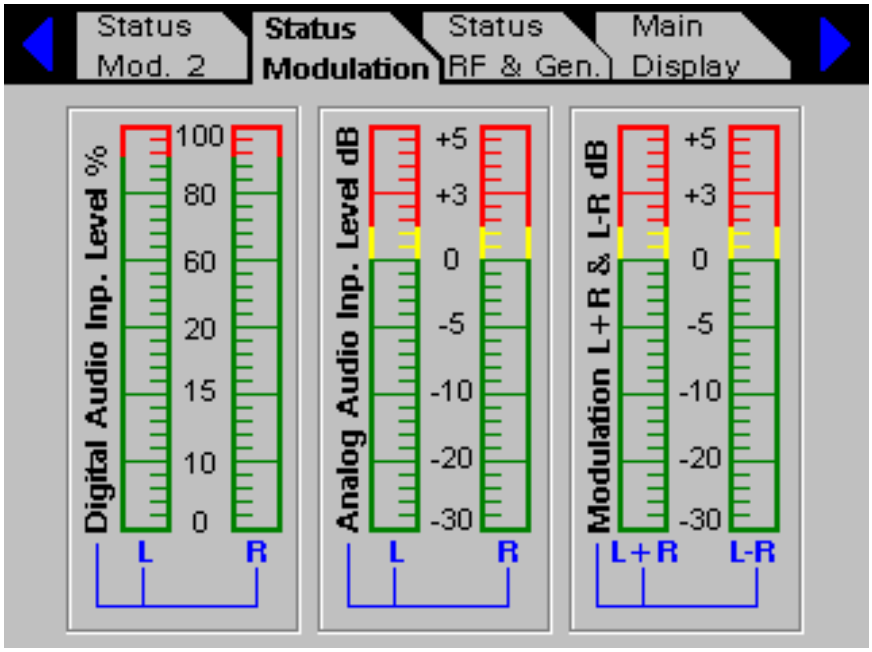

This display shows the digital and analog audio input levels.

It also shows the L+R and L-R levels in the digital stereo generator.

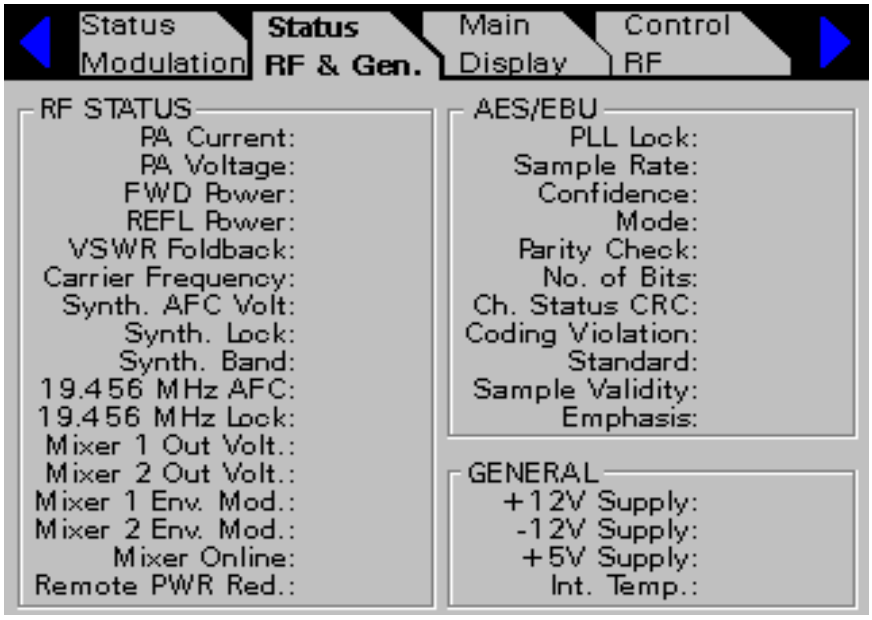

This display displays general status and multi meter reading for the 802D.

RF STATUS

PA Current: DC current of final amplifier.

PA Voltage: DC voltage of final amplifier.

FWD Power: Power output of final amplifier.

REFL Power: Reflected power of final amplifier.

Carrier Frequency: Frequency in Megahertz.

Synth. AFC Volt: DC control voltage of main PLL. This should be between 4.0 and 10.0 volts.

Synth. Lock: Green indicates that main PLL is locked. Red indicates main PLL is not locked. Exciter will automatically mute if PLL is not locked.

Synth. Band: Indicates PLL operating band selected. This is not an operator selected value. The exciter will automatically choose the proper band.

19.456MHz AFC: DC control voltage of master sampling clock PLL. This clock determines the pilot and subcarrier frequency.

(Continued on next page)

19.456MHz Lock: Green indicates that locked. Red indicates sampling clock PLL is not locked. Exciter will operate if this PLL is not locked but stereo pilot may be off frequency slightly. Mixer 1 Out Volt: Indicates signal level out of direct conversion mixer. Reference only. Mixer 2 Out Volt: Indicates signal level out of direct conversion mixer. For reference only.

Mixer 1 Env. Mod.: Indicates AM component level out of direct conversion mixer. For reference only.

Mixer 2 Env. Mod.: Indicates AM component level out of direct conversion mixer. For reference only.

AES/EBU

PLL Lock: Indicates whether the AES/EBU receiver is able to lock onto embedded clock in AES/EBU data stream. If this is not locked the exciter will automatically disable AES/EBU input to prevent transmitting noise.

Sample Rate: Indicates the incoming AES/EBU digital audio sample rate.

Confidence: Indicates whether the AES/EBU receiver is confident that it has recognized a valid signal. It also indicates whether the receiver is confident that there is no signal present.

Mode: Indicates the mode of the AES/EBU source. This is for reference only. The “Control" screen will indicate how the AES/EBU audio stream should be used to create mono or stereo program.

Parity Check: Indicates the status of the AES/EBU data parity bit. If the parity bit is not the exciter will disable the AES/EBU input.**No. of Bits:** Indicates the number of significant bits in the received AES/EBU audio stream. For reference only.

Ch. Status CRC: Indicates whether the AES/EBU receiver is receiving valid channel status information. If the CRC is not OK then all other data displayed in this section may not be accurate.

Coding Violation: Indicates whether there are errors in the bi-phase coding of the AES/EBU stream. The exciter will disable the AES/EBU input if there are coding errors. Coding Violations are sometimes caused by a faulty cable or excess noise in the AES/EBU data stream.

(Continued on next page)

Standard: Indicates whether the AES/EBU data conforms to the Professional or Consumer standard. The exciter will operate with either Information only.

Sample Validity: Indicates whether the AES/EBU data is valid or invalid. This validity flag can be used to disable the AES/EBU input. The Remote Control screen controls the Validity Check function.

Emphasis: Indicates the emphasis curve that has been applied to the AES/EBU audio data. Some audio processors indicate the 50/15uS standard when in fact the emphasis is 5uS. There is no AES/EBU standard method for indicating 75uS emphasis.

NOTE: All known emphasis curves can be compensated by the exciter from the Delay & Emphasis screen. This allows complete control of the transmitted emphasis curve. See the help for the Delay & Emphasis screen for more information.

GENERAL

+12V Supply: Voltage of regulated +12VDC.

-12V Supply: Voltage of regulated -12VDC.

+5V Supply: Voltage of regulated +5V.

Int. Temp.: Temperature of Direct Converter in Fahrenheit

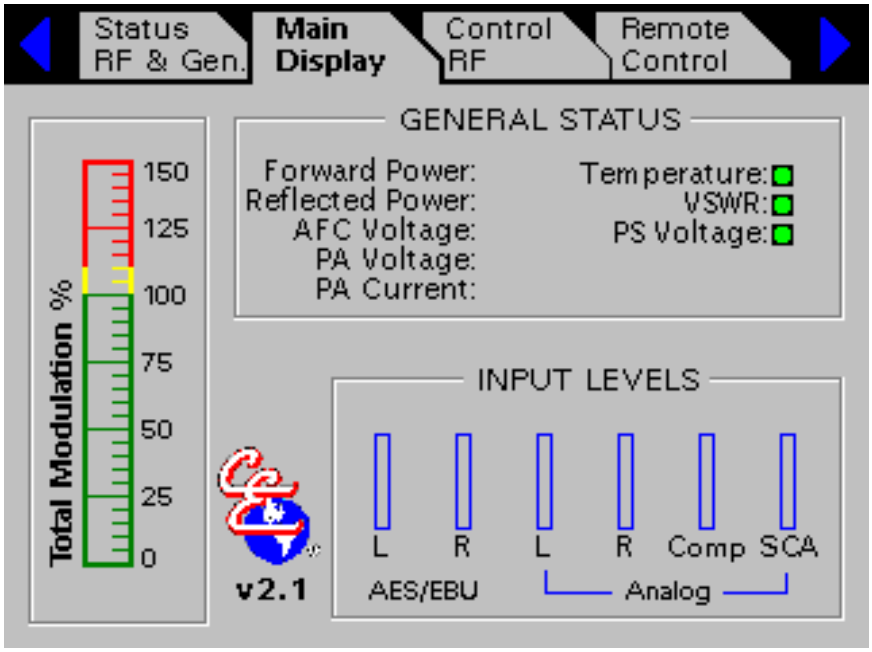

Each screen has an associated help screen. You are looking at the main help screen. You can get help about any screen by pressing the help key.

Use the thumb wheel to scroll through the help text. Press the key marked ESC to return from the help screen.

This is the primary (or main) screen of the 802D1. There are several screens to the right and left. The screens to the left contain helpful information about the current status of the 802D1. The screens to the right are for controlling the operation of the 802D1.

To navigate through the screens use the two menu select keys below the display screen. The arrow (or cursor) keys pointing up and down select various parameters on the current screen. The MAIN key can be used at any time to return to the main display screen.

Some parameters are variable values. These are displayed as a number in a box. Use the up and down arrow keys to select a variable. Then use the thumb wheel to increment or decrement a variable value.

Some options are digital in nature. In other words they are simply on or off. To turn on or off an option first use the up and down arrow key to select the option. Then turn the thumb wheel clockwise. The option will be turned on. Selecting some options will automatically turn off other options as necessary. The display will automatically update the status of all options when a selection is made.

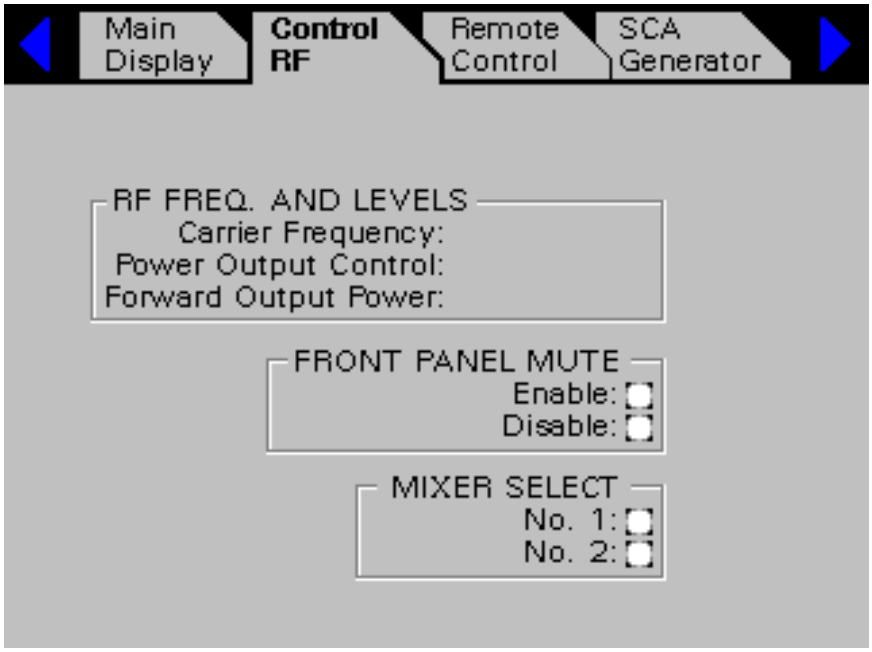

This is where you control the output power of the exciter and enable or disable the front panel mute control button. Use the up and down cursor arrows to choose between the various options. Then use the thumb wheel to vary a setting. For on-off type controls highlight the control using the up and down cursor keys. Then turn the thumb wheel clockwise to activate the setting.

The Power Output control adjusts the internal set point for the automatic power control system.

The 802D1 will automatically make whatever adjustments are necessary to control the power output to within 0.5 watts of the preset value.

The Forward Output Power is a status readout showing the actual forward power output. Under normal conditions this should be within 0.5 watts of the Power Output Control.

The Front Panel Mute option selects whether the red mute button on the 802D1 front panel is active. This control may be disabled to prevent accidentally muting the exciter. For maintenance on the main transmitter this control can be enabled to allow quick muting of the exciter.

NOTE: Unlike previous exciters in the 802 line the 802D1 mute function results in a total mute of the RF output power.

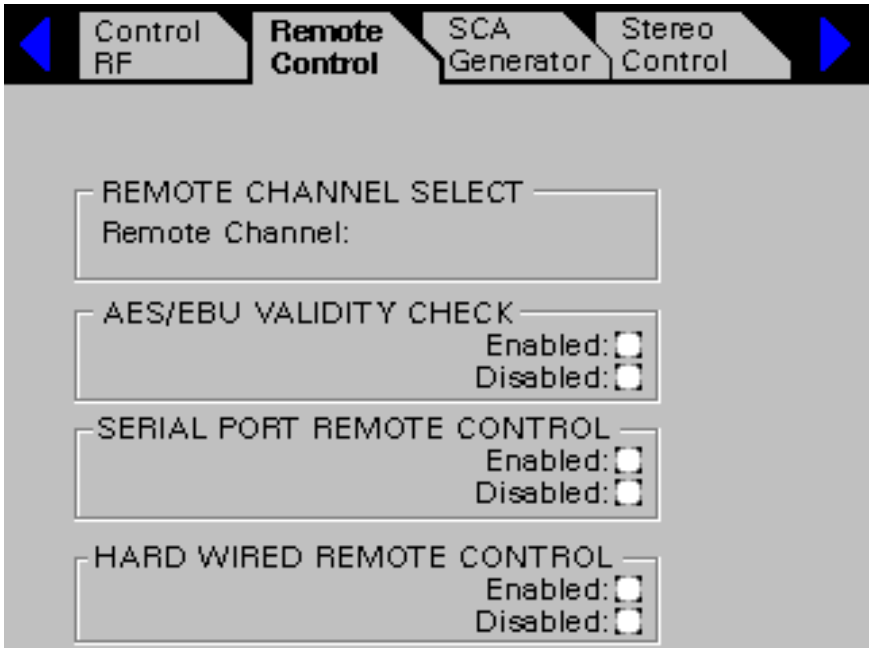

This is where certain remote control features are enabled or disabled.

Use the up and down cursor keys to choose between the various selections. When the highlight box is around the desired selection simply turn the thumb wheel clockwise.

A selection will indicate its status by showing a dark dot to indicate that the option is enabled.

The **REMOTE CHANNEL SELECT** will display the current N+1 channel selection received by the remote control. There are 5 remote mode inputs on the 802D1. The Remote Channel can be any of 32 possible values ranging from 0 to 31. The remote mode inputs must have a continuous closure.

The **AES/EBU VALIDITY CHECK** is used to enable checking of the Validity bit in the AES/EBU digital audio packets. Certain digital STL equipment does not properly encode this bit. If the Status RF & Gen. screen indicates that "Sample Validity" is not OK then disabling this check may restore AES/EBU audio. Note that disabling this feature may prevent the automatic switching between digital and analog sources.

The Remote Control Enable functions are to allow temporary disabling of the external remote control for servicing or testing.

(Continued on next page)

WARNING: BE CAREFUL WHEN DISABLING THE HARDWIRED REMOTE CONTROL!

If the hardwired remote control is disabled this might cause unexpected results when using the N+1 features of the 802D1. The remote control enabled/disabled selection is stored with each of the 32 possible channels. If a particular channel has the hard-wired remote feature disabled it will be impossible for a remote control system to switch to another channel. This may cause unexpected results.

For example: Assume that channel #3 has HARD WIRED REMOTE CONTROL enabled. Also, assume that channel #4 has HARD WIRED REMOTE CONTROL disabled. If the remote control system switches between channel #3 and channel #4 then it will not be possible to switch to another channel unless HARD WIRED REMOTE CONTROL is enabled in channel #4.

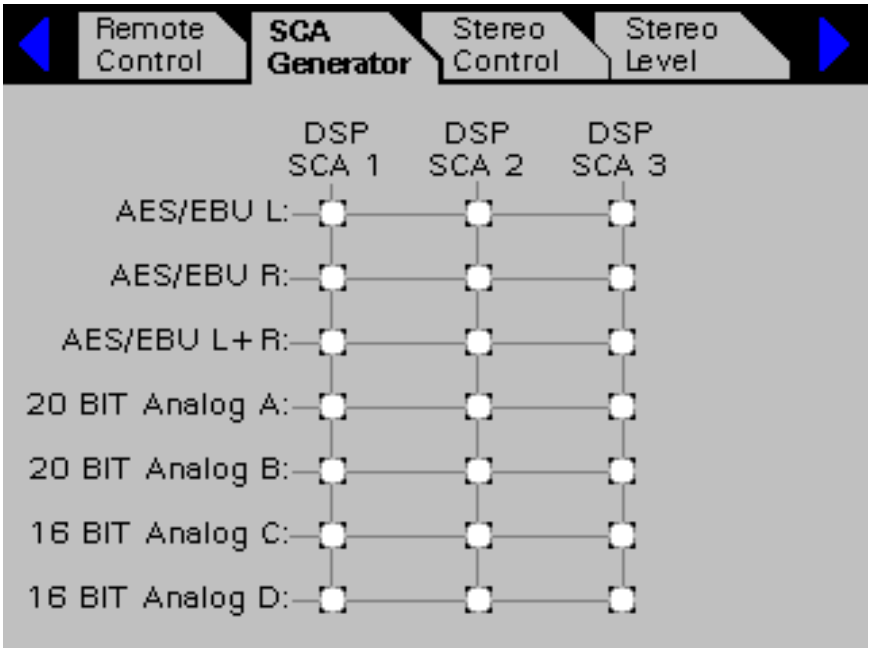

This SCA generator is an optional feature. Contact your District Sales Manager for information on how you can obtain the latest in digital SCA generation software.

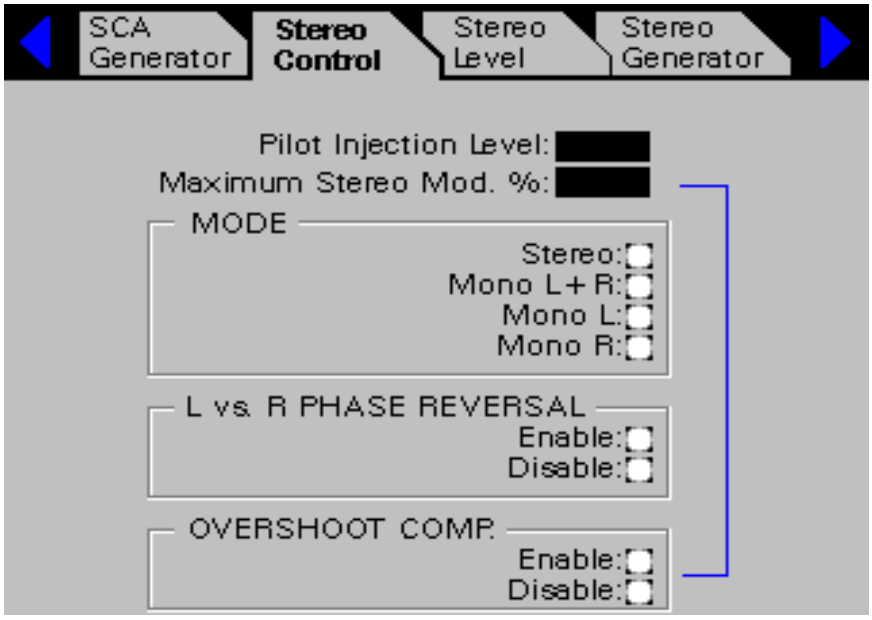

This screen allows you to set various parameters for the DSP stereo generator.

Pilot Injection Level:

The Pilot Injection Level controls the amount of pilot level used by the DSP stereo generator. The value is shown in % of injection relative to 75kHz total deviation.

Maximum Stereo Mod. %:

Used by the overshoot compensator. See the next page about the OVERSHOOT COMP. feature.

MODE:

The DSP stereo generator can be configured for stereo or mono operation. Select Stereo for normal operation. Select Mono L + R to produce a mono signal with equal parts of the program from both the left and right inputs. Select Mono L or Mono R to produce a mono signal using either the left or right input.

PHASE REVERSAL:

Enabling this option will reverse the phase of the right channel. This feature can be useful if a wiring problem is causing loss of L+R signal in mono receivers.

(Continued on next page)

OVERSHOOT COMP.:

A special overshoot compensation system has been installed in this exciter. There are two parameters which must be set for this to work correctly. First the Maximum Stereo Mod % must be set to the desired stereo channel modulation level. This is usually 100% but you are free to choose any value up to 200%. Second the system must be enabled or disabled by selecting the appropriate option and pressing the SEL softkey.

WARNING: This technique will do exactly what it is programmed to do. That is it will not allow the stereo channel modulation to exceed the Maximum Stereo Mod limit.

The software limiter is similar in capability to a composite clipper. This can cause severe distortion if the input levels are not adjusted properly.

Note that the pilot is taken into account when the exciter computes the total maximum stereo modulation so that the pilot is always transmitted undistorted.

If you have SCA channels they will be unaffected by this option and may cause total modulation to exceed the Maximum Stereo Mod by the amount of SCA injection.

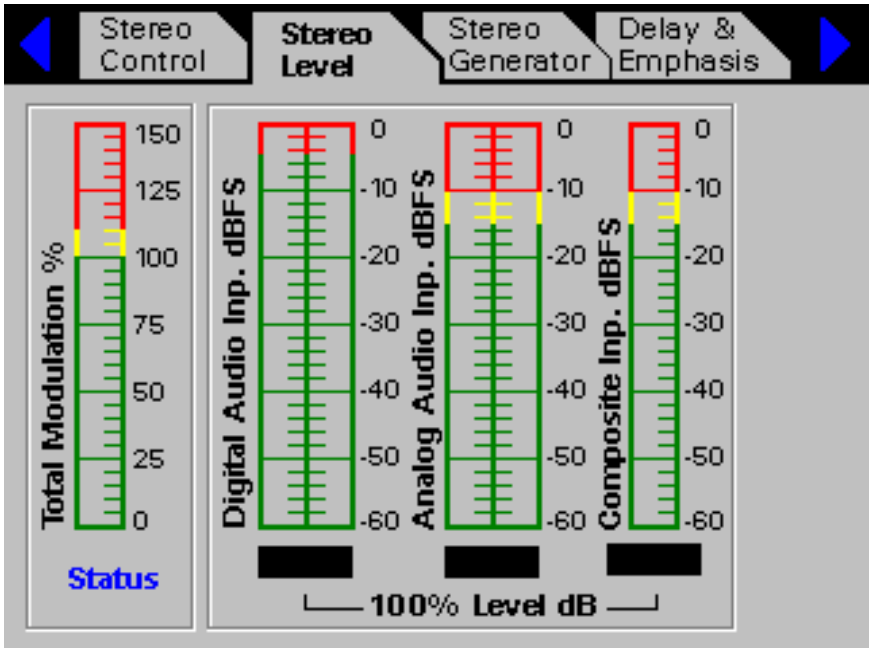

This is where you control the reference level for the input to the stereo generator or the composite stream gain. Use the up and down cursor keys to choose between AES/EBU digital audio, analog audio input levels or composite input levels. Turn the thumb wheel to increase or decrease the reference level of the selected input.

The reference level is the input level which will produce 100% stereo modulation (i.e. 75kHz deviation. The bargraphs indicate the actual input level. When the bargraph reaches the preset reference level displayed the stereo generator will produce 100% modulation. A lower reference level will produce more stereo modulation.

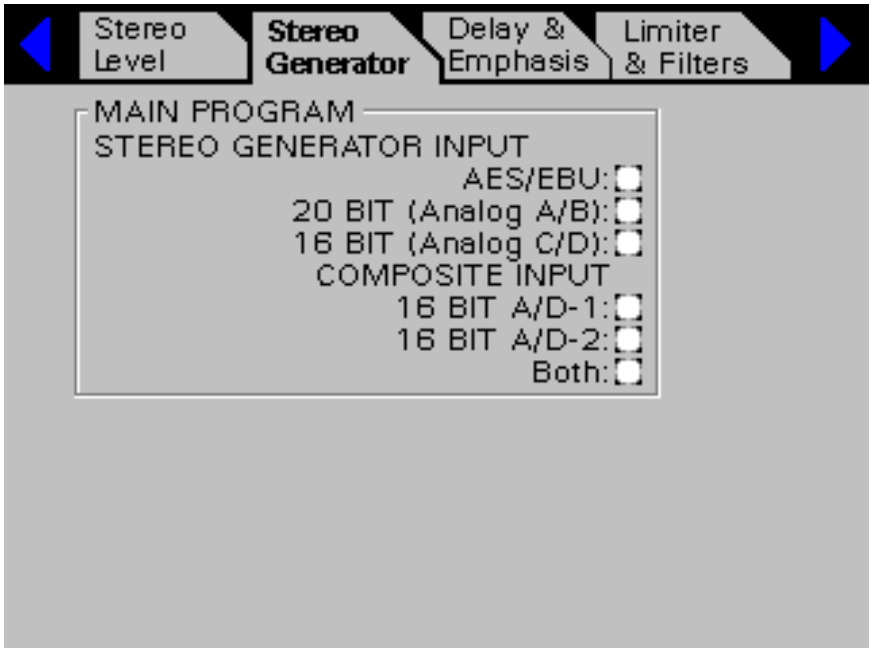

This is where you can choose the primary input source for the main stereo program.

Use the up and down navigation keys to choose between the various main stereo program inputs. When the highlight box is around the desired selection simply turn the thumb wheel. The 802D1 will automatically enable the DSP software necessary to produce the desired main stereo program.

The AES/EBU input selection will enable the DSP based stereo generator. The digital stereo generator will obtain its source information from the digital audio stream. You may verify that the AES/EBU digital audio is being received and transmitted by observing the rear panel LED. When the green LED next to the AES/EBU connector is illuminated the DSP stereo generator is using a valid digital audio signal.

NOTE: In the event of a failure of the AES/EBU signal the 802D1 will automatically switch to the composite stereo input. The 802D1 will also produce a fault status on the remote output connector. The AES/EBU LED will also illuminate RED.

The 20 BIT A/D selection will enable the analog left and right inputs on the rear of the 802D1. The digital stereo generator will first digitize the left and right audio with 20 bit precision. Then the normal stereo generator functions will produce the stereo program.

(Continued on next page)

The 16 BIT A/D selection will enable the auxiliary analog left and right inputs on the rear of the 802D1. These inputs are disabled on an 802D1 which includes the AES/EBU stereo option.

NOTE: When using the 16 bit A/D inputs for left and right stereo, the 802D1 cannot process composite input signals.

The 16 BIT A/D-1 selection will enable the stereo composite input. The internal digital stereo generator will be switched off and the composite digitizer will be routed to the 802D1 digital FM direct converter.

The 16 BIT A/D-2 selection will enable a backup stereo composite digitizer. This also disables the SCA inputs which normally use the second 16 bit composite A/D.

The Both selection will use two 16 bit composite A/D converters for improved dynamic range. This option is only available when no composite SCA inputs are required.

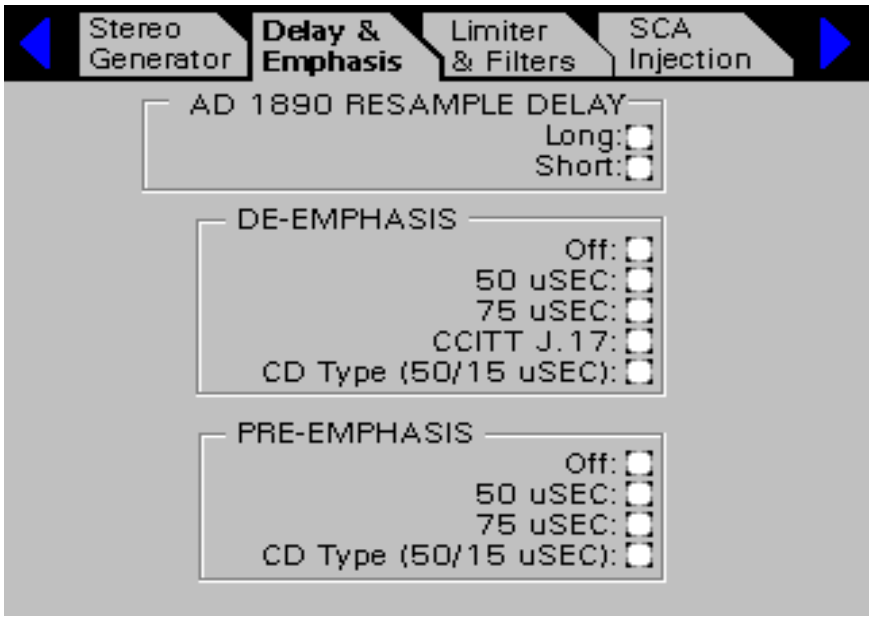

OPTIMOD 8200
USERS PLEASE READ THIS HELP SCREEN FOR IMPORTANT INFORMATION AND HELP FOR GETTING YOUR PRE-EMPHASIS CORRECT.

This screen controls the automatic sample rate converter.

In addition, it also controls the de-emphasis and pre-emphasis filters.

The AD1890 resample delay option chooses between long delay mode and short delay mode for the AD1890 automatic AES/EBU sample rate converter.

De-emphasis is applied to the incoming audio. Pre-emphasis is applied to the output of the de-emphasis filter.

Select the de-emphasis curve which best matches your source.

You may need de-emphasis applied if the audio path between the studio and transmitter (STL) has any pre-emphasis applied to it.

Select the pre-emphasis curve which is compatible with the receiver standard in your area. In the USA choose 75uS and in Europe choose 50uS.

If your source already has the desired pre-emphasis curve simply turn off all de-emphasis and pre-emphasis settings on this screen.

(Continued on next page)

NOTE: If you have an ORBAN OPTIMOD 8200 digital audio processor and you wish to use the 8200 to control pre-emphasis you may need to use the CD Type (50/15 uSec) pre-emphasis.

You may need this special pre-emphasis filter if you are using an uncompressed digital STL between the 8200 and the 802D1. Consult your STL manual to determine if it automatically removes pre-emphasis. If it does remove pre-emphasis then it most likely assumes that the pre-emphasis is of the CD type. Simply select the CD type pre-emphasis to correct the frequency response.

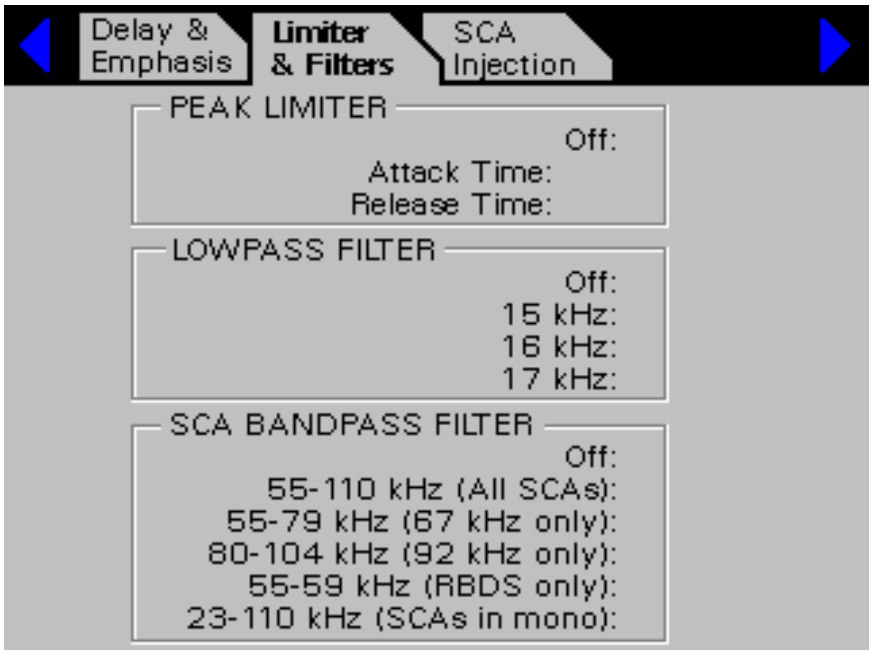

This screen allows you to adjusts the audio processing filters.

The LOWPASS FILTER section controls the cutoff frequency of the internal digital stereo generator. The filters are phase matched and might be useful to limit high frequency energy above the specified cutoff frequency. These filters are optional.

The SCA BANDPASS FILTER section controls the SCA protection filter. This filter is designed to protect the main stereo or mono channel from interference due to noisy SCA equipment. If the external SCA generator has noise outputs which cause noise in the main program these filters can be very useful to eliminate this noise. Choose the filter which most closely matches your SCA situation. The most useful is the 55-110kHz filter which protects the main channel from all SCA interference. The specialty filters are even more powerful in protecting the main channel when only a single SCA service is being used or the station is transmitting in MONO.

The peak limiter feature is under testing at the Continental factory. Please contact the factory for availability.

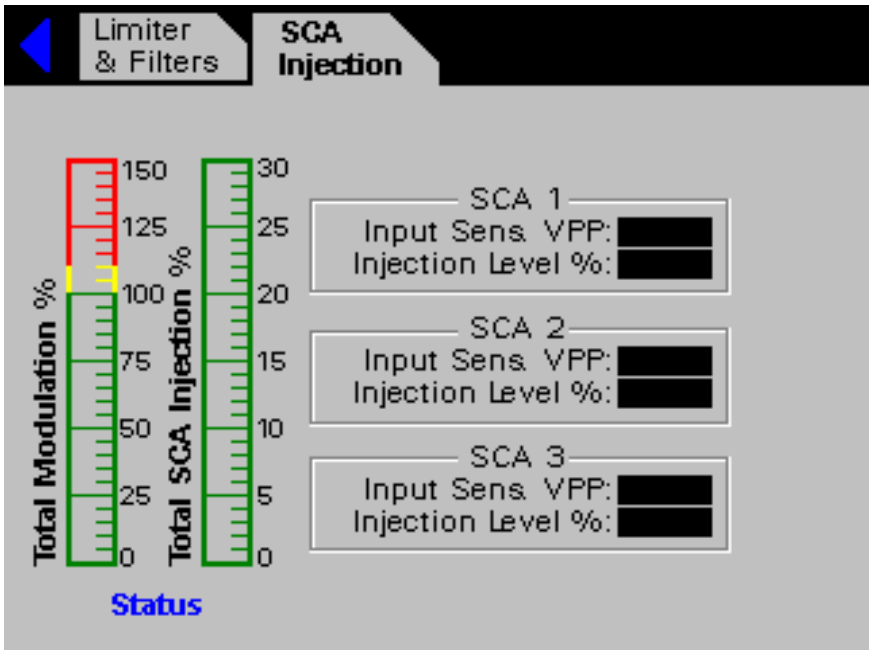

This screen allows adjustment of SCA injection levels. The 802D1 is equipped with 3 SCA generator inputs.

Each inputs has its own level control.

Adjust the input sensitivity to match the output of your SCA generator. Then adjust the injection level to the desired amount.

If you do not know the SCA generator output level, use the following procedure:

1) Select the desired injection level.

2) Using an SCA modulation monitor, adjust the Input Sens. VRMS level until the SCA modulation monitor injection level reads the desired injection level. You will have calibrated the input sensitivity and can read the SCA input level.